(In accordance with the SABS 0107 1996 Code of Practice for the Design and Installation of ceramic / porcelain tiles).
below sans0107:1996 info on Movement joints

6.2.8 Movement joints

6.2.8.1 General

Stresses that affect the flooring can result from causes such as drying shrinkage, deflection and moisture
movements in the substrate and thermal and moisture changes in the tiles. These stresses can lead to
loss of adhesion and bulging or cracking of the floor. To counteract this, movement joints that extend
through the tiling and its bedding should be incorporated in the installation. The designer should assess
the magnitude of any stresses ancl decide where movement joints, flexible joints and contraction joints
should be located, taking into account all the relevant factors, including the type of flooring and bedding
(see 7.3.5).
Movement joints for floor tiling are incorporated as follows:
a) structural movement joints, i.e. flexible joints aligned to structural movement joints in the substrate
(see figure 3);
b) tile panel joints, i.e. flexible joirits that accommodate smaller movements in the tiling but not in the
substrate (see figure 4);
c) perimeter joints, i.e. flexible joints between a fixed building element (for example, walls and columns)
that might be or are not covered with a tiling system, and an edge of the floor tiling system under consideration. Figure 5 shows aerimeter joints between the floor tiles and either wall tiles or skirting
tiles. In figure 5(a), the skirting goes right down to the floor substrate, resulting in a non-compressible
contraction joint that acts essentially only horizontally. In figure **5(b),** the walkkirting tiles end at the
top level **of** the floor tiling, resulting in a limited movement joint that can act both horizontally and vertically, especially if the optional bond-breaker is incorporated.
NOTE - Further possibilities for movement joints are given in annex A.

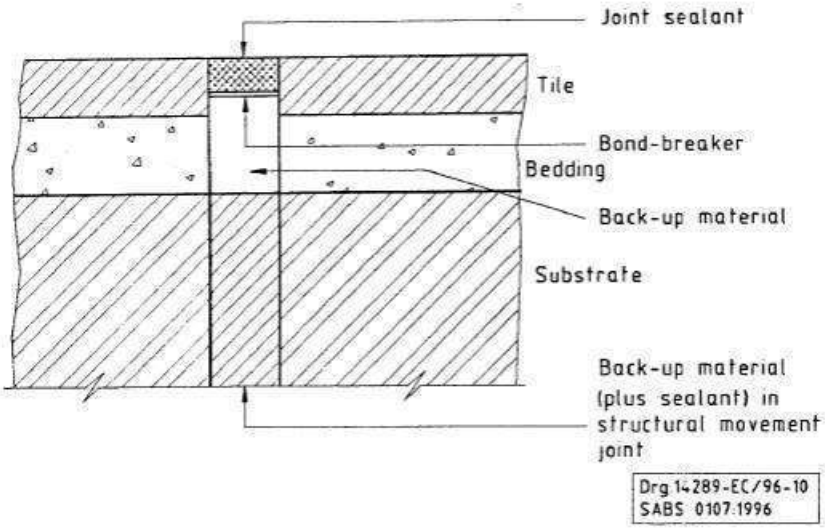

Figure 3 — Flexible joint over structural movement joint

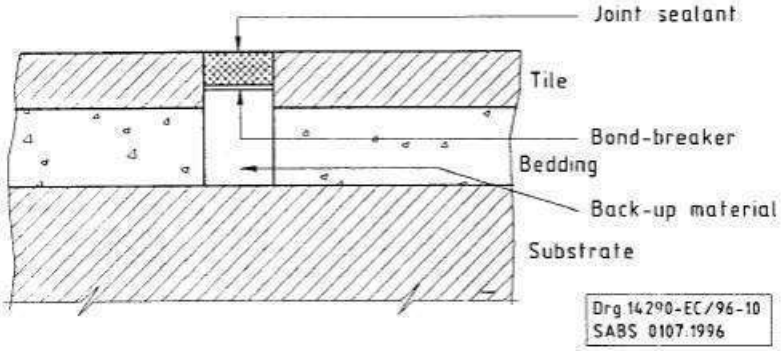

Figure 4 — Flexible tile panel joint over continuous structural substrate

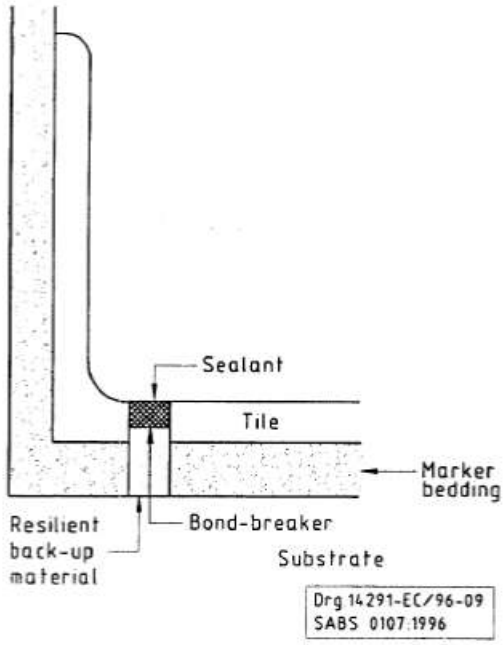

Figure 5(a) — Perimeter joint between skirting and floor tiling (see also figure A.1, Type G)

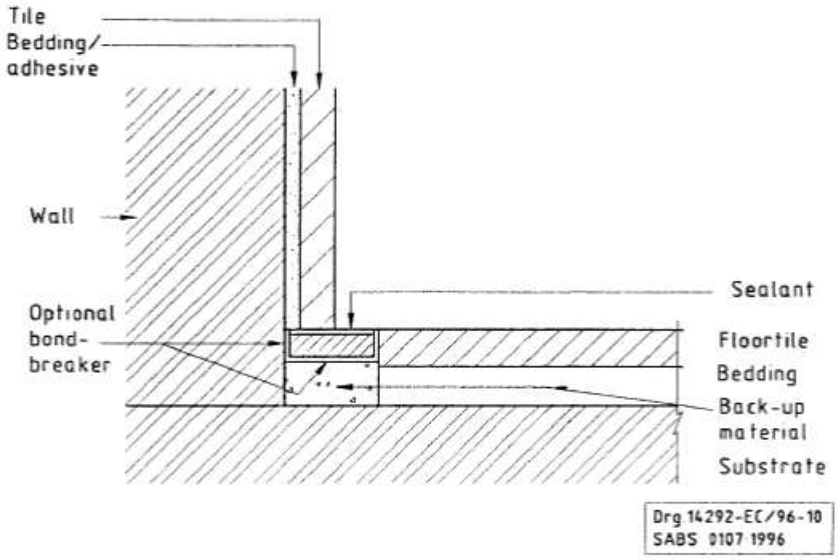

6.2.8.2 Structural movement joints

Structural movement joints in the bedding and tiling should be sited direct over and be continuous with,
and of the same width as, structural movement joints in the substrate.

6.2.8.3 Other movement joints

Tile panel movement joints (see figure 4) should be inserted over supporting walls and beams at intermediate
positions, to accommodate deflection of the substrate and movements in the flooring.
Contraction joints (see figure 5(a)) may be used instead of tile panel joints over supporting walls and
beams. Flexible joints of either type should be used at floor perimeters and to divide the floor into bays

at the intervals recommended (see **7.3.5).** Wherever possible, they should coincide with structural
features (for example, columns or door openings), or they can be planned to provide a decorative panelled effect. Where temperature changes are expected, for instance arounc boilers, over heating
installations or from strong sunlight, an assessment of the likely temperature range and corresponding
linear changes in the flooring should be made, to determine whether any additional allowance for movement is necessary.
In floors that have to withstand hard-rimmed wheel traffic or the dragging of heavy loads, the position
of movement joints should, when possible, be so planned that they do not occur in the traffic area.
Where this is not practicable, the joints should be of types that have their edges reinforced with metal or
rigid plastics sections (see annex A).
Joints other than those that are protected by metal or rigid plastics edging, and that are subject to traffic
heavier than light pedestrian, should not be wider than 10 mm. Information on the permissible maximum
and minimum joint widths should be obtained from the manufacturer of the particular joint filling material.
NOTE - The illustrations in figures **3. 4** and 5 indicate the basic principles of the types of joints referred to above. Prefabricated materials **(as** shown in the examples in annex **A)** are available that embody the principles shown, but they might
differ in detail.

6.2.8.4 Typical movement joints around columns

6.2.8.4.1 General

Isolation joints permit horizontal and vertical movement between adjacent slab bays and fixed elements
of the structure (see figure 6). The main features of isolation joints are:
a) they are generally used where the floor meets fixed parts of the building, such as columns, walls, and
machinery bases; and
b) these joints can be used where the internal floor slab meets the external pavement.

6.2.8.4.2 Joint layout

A suitable joint layout is determined by a combination of requirements that include:
a) provision of isolation joints between fixed elements of the structures (for example, columns, walls, or
machinery bases) and adjacent slab bays;
b) location of construction joints where the bay length and width are dictated by the construction method;
and
c) location of contraction joints dictated by bay length and width.\

A suitable pattern of right-angled rectangular panels or bays is then selected. A typical joint layout is shown in figure 6.

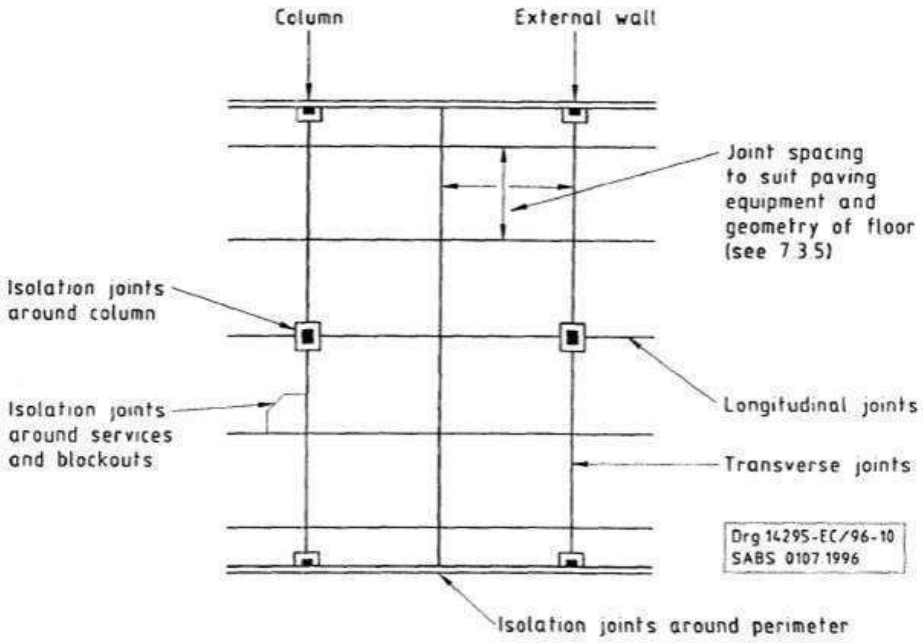

Figure 6 — Right rectangular joint layout

6.2.8.5 Sealants

The choice of sealant will depend upon many factors, including extensibility, resistance to chemicals, wear resistance, penetration of grit and contamination, resistance to damage from cleaning processes, and ease of placing. In each case, the sealant manufacturer's advice should be taken into account.

A summary of the more important properties of recommended sealants is given in table 2.

6.2.8.6 Back-up materials

The back-up material in the lower part of the joint should be compatible with the sealant being used; it should be compressible, should support the sealant and should not give off bituminous or oily products. In particular, it should assist the seal in carrying traffic loads, and its compressibility should be such that, when the joint closes, the sealant is not forced out. Suitable materials include, for example, cellular polyethylene.

Where sealants with a large movement capability are used, it is essential that they not stick to the back-up material, since the ability of the sealant to accommodate movement will be reduced by any restriction of its under-face. To prevent this, a bond-breaking tape should be applied between the back-up material and the sealant.

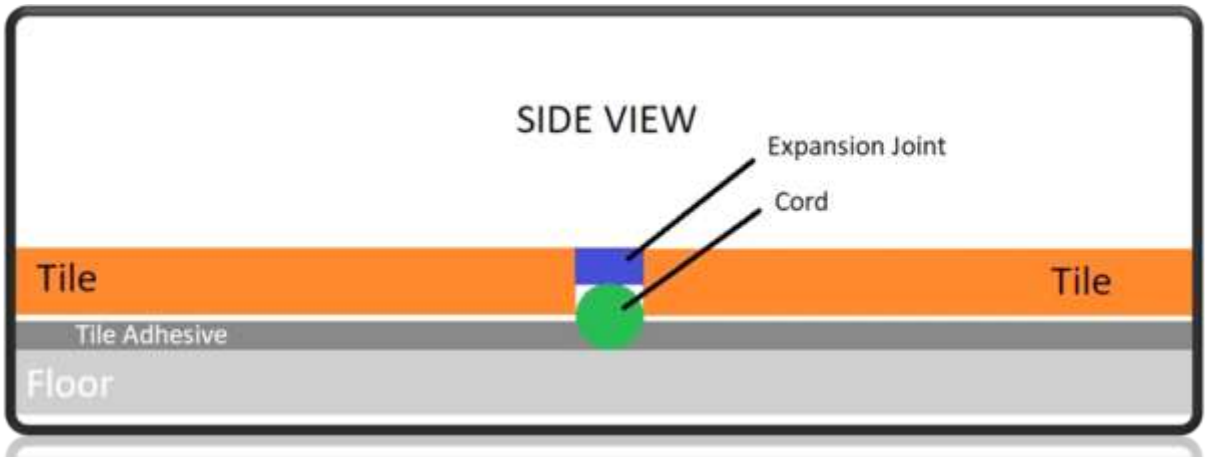
SIDE VIEW
Expansion Joint
Cord
Tile
Tile
Tile Adhesive
Floor